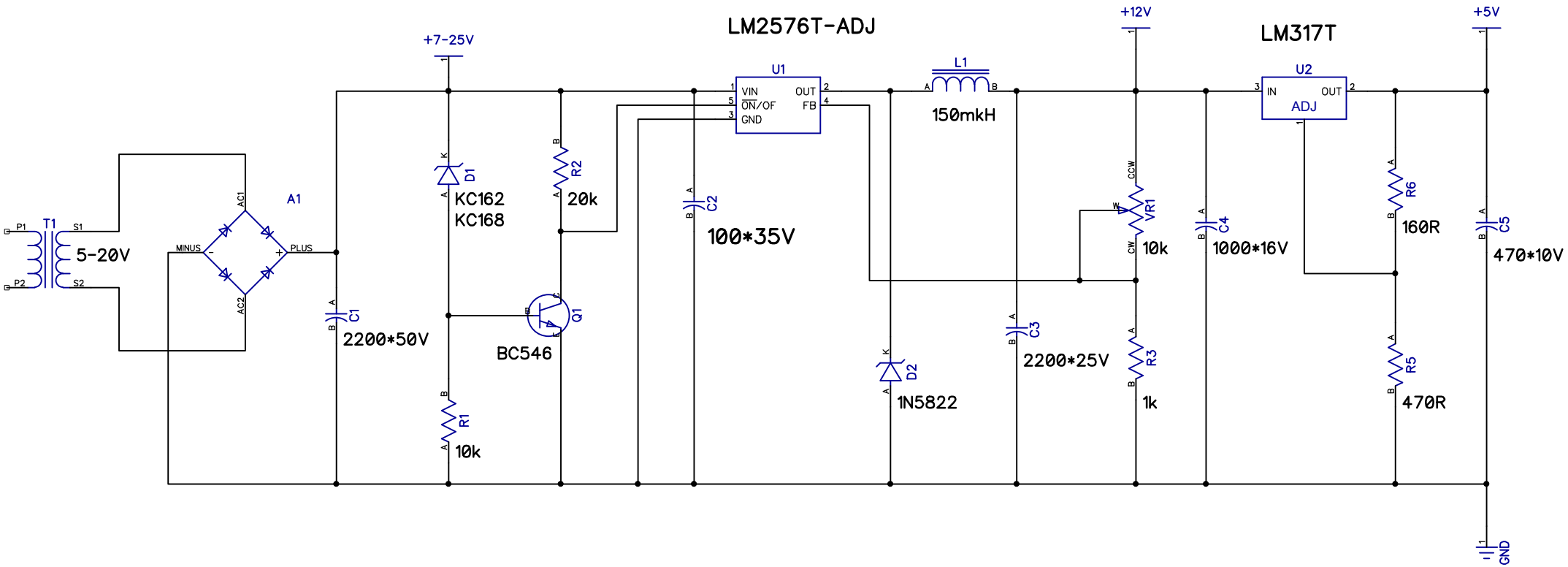
LM2576T-ADJ
LM317T
+7-25V
+12V
+5V
U1
VIN
ON/OF
GND
OUT
FB
U2
IN
OUT
ADJ
L1
150mkH
T1
P1
P2
S1
S2
5-20V
A1
AC1
AC2
MINUS
PLUS
C1
2200*50V
D1
KC162
KC168
R1
10k
R2
20k
Q1
BC546
C2
100*35V
D2
1N5822
C3
2200*25V
VR1
CCW
CW
W
10k
R3
1k
C4
1000*16V
R6
160R
R5
470R
C5
470*10V
GND